Active or Passive L1/L2 GPS Antennas, P/N: 3.75G1215A-XS-4-T (3.75"x4.0") Configurations, Compatible to Trimble's P/N: 22433-40

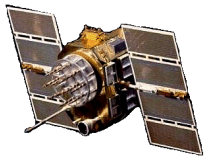

ISO 9001:2008/FAA Approved Facility

Antenna Mounts: http://www.antcom.com/documents/catalogs/PeripheralAntennaProducts2.pdf

ANTCOM CORPORATION . 367 Van Ness Way, #602 . Torrance, CA 90501 . Tel: (310) 782-1076 . Fax: (310) 782-1086 . E-mail: antennas@antcom.com . http://www.antcom.com

NOTICE OF PROPRIETARY RIGHTS
THIS DOCUMENT CONTAINS CONFIDENTIAL TECHNICAL DATA INCLUDING TRADE SECRETS PROPRIETARY TO ANTCOM CORP. DISCLOSURE OF THIS DATA TO YOU IS EXPRESSLY CONDITIONED UPON YOUR ASSENT THAT ITS USE IS LIMITED TO USE WITHIN YOUR COMPANY ONLY (AND DOES NOT INCLUDE MANUFACTURE OR PROCESSING USES). ANY OTHER USE IS STRICTLY PROHIBITED WITHOUT PRIOR WRITTEN CONSENT OF ANTCOM, CORP.

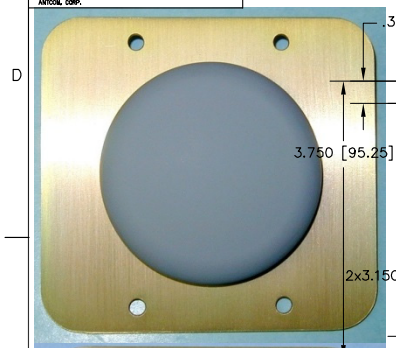

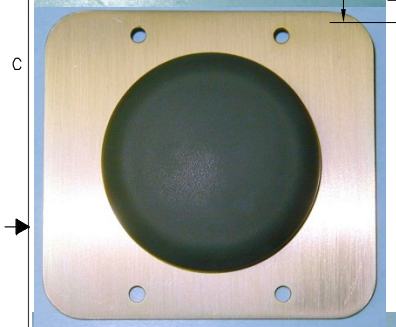

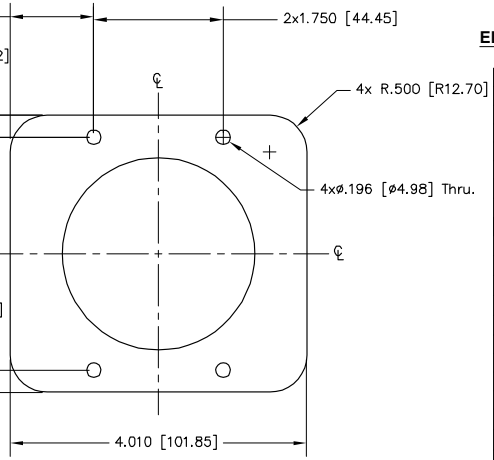

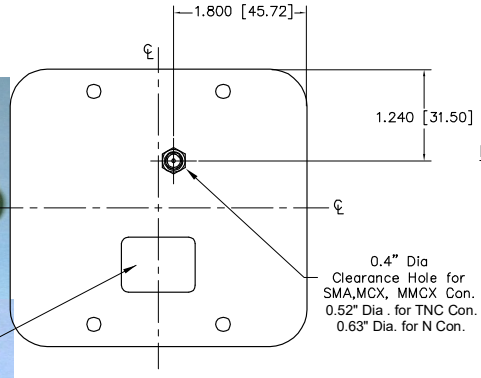

SPECIFICATIONS

ELECTRICAL:

FREQUENCY:	L1: (1575.42 ±12) MHz		L2: (1227.60 ±12) MHz	
RADIATION PATTERN:	HEMISPHERICAL			
POLARIZATION:	RHCP		RHCP	
VSWR:	< 1.5:1		< 1.5:1	
IMPEDANCE:	50 ohms		50 ohms	
ANTENNA GAIN (dBic):	Free Space	4 ft G.P.	Free Space	4 ft G.P.
@ 90 ° (ZENITH):	+ 4.7	+ 3.5	+ 3.3	+ 4.9
@ 10 ° Elevation	- 1.8	- 2.0	- 3.8	- 3.6
@ 20 ° Elevation	- 0.3	+ 0.8	- 2.0	- 0.1
@ 30 ° Elevation	+ 1.4	+ 1.8	- 0.5	- 1.8
@ 60 - 90 ° Elevation:	> 3.9	> 2.8	> 2.7	> 3.0
BEAM WIDTH (3dB):	114 Deg.	139 Deg.	106 Deg.	75 Deg.
AXIAL RATIO:	2 dB		2 dB	
LIGHTNING PROTECTION:	DC GROUNDING			
LNA GAIN:	33 dB		35 dB	
LNA NOISE FIGURE:	3.0 dB		3.0 dB	
LNA P1dB Out:	+13 dBm		+13 dBm	
LNA DC POWER:	2.5V/20mA, 3V/29mA, 3.3V/35mA, (2.5-24)V/<50mA			
REJECTION @ (-50/+50) MHz	-41 dB / -59 dB		-40 dB / -40 dB	
@ (-100/+100) MHz	< -65 dB		< -65 dB	
POWER HANDLING	1 Watt CW, Optional: 10 Watts 1 Microsec Pulse (-AL-)			

MECHANICAL:

SIZE:	4.0 in. [101.9 mm] X 3.75 in [95.25 mm] X 0.78 in [19.81 mm]
WEIGHT:	4.00 oz. (113 grams)
FINISH:	BLACK SKYDROL RESISTANT POLYURETHANE ENAMEL PAINT AND BASE IRIDITE PER MIL-C-5541F Type I Class 1A
COLOR:	LUSTERLESS BLACK #37038 PER FED-STD-595B
MATERIAL:	6061-T6 ALUMINUM ALLOY BASE COMPOSITE RADOME, IMPACT, ABRASION, UV, SOLVENT, SKYDROL RESISTANCE AND FIRE RETARDANT
CONNECTOR:	SMA FEMALE (OPTION: SMC, SSMC, MCX, MMCX, TNC, N, or Cable)

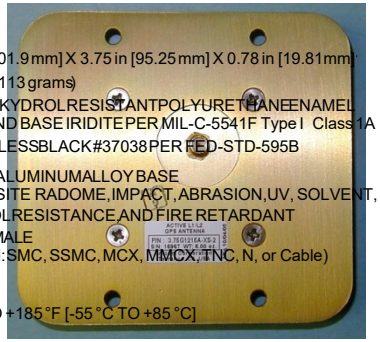

ENVIRONMENTAL:

TEMPERATURE:	-67 °F TO +185 °F [-55 °C TO +85 °C]
ALTITUDE:	70,000ft.
VIBRATION:	> 30 G's
HUMIDITY:	HERMETICALLY SEAL

FEDERAL & MILITARY SPECIFICATIONS

DESIGN TO: FAA TSO-C144, DO-160D, D0-228, MIL-C-5541, MIL-E-5400, MIL-I-45208A, MIL-STD-810, AND SAE J1455

SIZE:	FREQ. BAND:	LNA:
1: 2" SQ.	1215: L1/L2	A: WITH LNA; A4 WITH 40 DB LNA WITHOUT REJECTION FILTERS
1.9: 1.9" SQ.	15: L1 ONLY	AL: WITH LNA/LIMITTER
2: 2.6" DIA.		P: WITHOUT LNA
3: 3.5" DIA.		PL: WITHOUT LNA and THINNER (HEIGHT= 0.58")
4: MINI ARINC		A2: WITH 20 DB LNA WITHOUT REJECTION FILTERS

P/N: 3.75G1215A-XS-4-T

CABLE'S LENGTH	CONNECTOR	COLOR
X: NO CABLE	S: SMA; P: PINS	-1: GLOSS WHITE #17925 PER FED-STD-595B
M: MAG, N: NO MAG.	M: MCX; MM: MMCX	-2: LUSTERLESS GRAY #36320 PER FED-STD-595B
#: CABLE LENGTH (IN)	N, NB: N, N-Bulkhead	-3: OLIVE DRAB GREEN #34031 PER FED-STD-595B
R: RIGHT ANGLE CON.	T, TB: TNC, TNC-Bulkhead	-4: LUSTERLESS BLACK #37038 PER FED-STD-595B

2. ADHESIVE GASKET IS SUPPLIED BY ANTCOM CORPORATION
1. DIMENSIONS IN BRACKETS ARE IN MILLIMETERS [mm]

NOTES: UNLESS OTHERWISE SPECIFIED:

REVISIONS				
ZONE	REV	DESCRIPTION	DATE	APPROVED

QUANTITY REQD		DESCRIPTION	PART NO	MATERIAL	FINISH	ITEM NO
				–	–	5
1				–	–	3
4		8-32 Pan Head, 1/2in long	MS 51957-45			2
1				–	–	1

PARTS LIST

UNLESS OTHERWISE SPECIFIED DIMENSIONS ARE IN INCHES TOLERANCES ARE: FRACTIONS ± 1/64, DECIMALS .XX ± .010, .XXX ± .005, ANGLES ± 1°
TOLERANCE SYM PER ANSI Y14.5
REMOVE ALL BURRS. BREAK EXTERNAL EDGES .005 TO .015 FILLETS R .005 TO R .030 SCREW THREADS PER MIL-S-8879 DIA'S ON A COMMON ℄ ⌖ .005
MACHINED SURFACES 125
DO NOT SCALE DRAWING

DRAWN
CHECKED
ENGINEER
APPROVED S. HUYNH May-01-03
CAD FILE NO

ANTCOM CORP. TORRANCE, CALIFORNIA

OUTLINE DRAWING
L1/L2 ACTIVE
GPS ANTENNA

SIZE D | CAGE NO 3CVE1 | DRAWING NO 3.75G1215A-XS-4-T | REV –
SCALE 1/1 | SHEET 1 OF 1